REVISIONS				
REV	DESCRIPTION	CHK	ENG	DATE

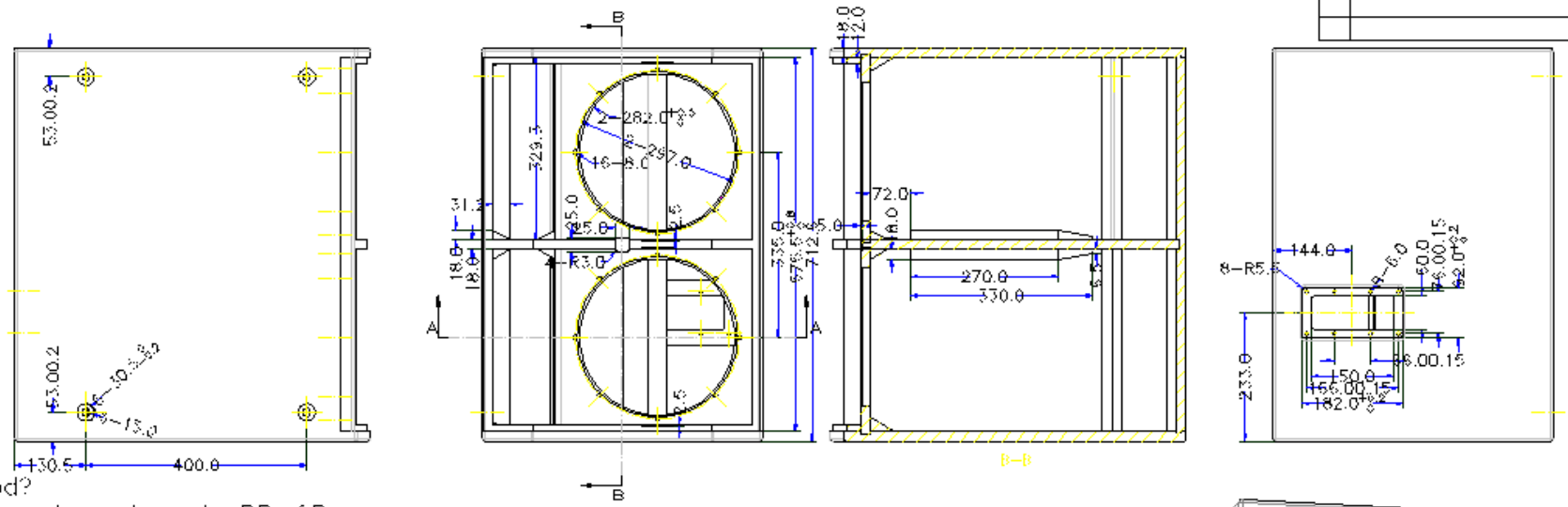

Plywood?

1.Marine plywood grade BB-CP

2.Lamination of two veneers border upon should be vertical

3.Both side symmetrical veneers of the center veneer are from the same or similar type wood

4.Degree of moisture 6-14%

5.Thickness 18MM +0.5/-0.8.

6.Glue:SA-100;(Nanjing Skybamboo Science & Technology Industry Co.,Ltd,China)BOSE Part No:PT280940

Bonding Properties of Gluts

Impregnation delamination,%	<10	
Compressive shear strength	strengtg(MPa)	wood failure(%)
Manchurian ash (hard wood)	>=10	>=60
Spruse (soft wood)	>=6	>=65

a.peeling off rate after dipping in test % ?10

b.peeling off rate after ferv. % ?10

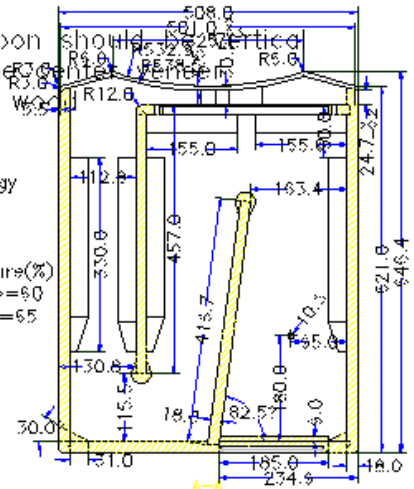

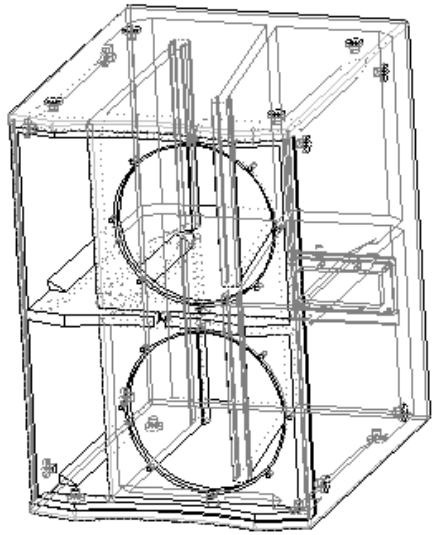

Aqueous Polyurethane Adhesive for Wood

The product with good heat resistance to water, oil and heat, excellent mechanical properties, has wide applied areas in the manufacture of various wood works.

Usage:

1. Bonding of wood, hard wood and soft wood, adaptable for the manufacture of glued laminated wood, highly utility furniture and ordinary wood work.
2. Bonding of wood and wood, plastics, metal, ceramic for interior decoration of hard wood and surface decoration of wood-based panels.

Features

1. Excellent wood strength
2. Water bound, thus safe and unconditioned
3. Free from formal dehyde and phenol
4. Approximately neutral
5. Hardening at room temperature
6. High initial bond strength
7. Good gluing power by at lower temperature

Physical Properties

Item	Base Resin	Curing Agent
	[illegible]	[illegible]
Appearance	[illegible]	[illegible]
Solids content, %	[illegible]	[illegible]
Viscosity (25%), P	[illegible]	[illegible]
PH value	[illegible]	

Bonding Properties

Impregnation delamination, % <10

Compressive shear strength strength(MPa) wood failure(%)

Manchurian ash (hard wood)	>=10	>=60
Spruse (soft wood)	>=6	>=65

Instructions for Use

POLYURETHANE COATING FOR THE EXTERIOR OF WOODEN CHARTERS

1. SCOPE	[illegible]
2. MATERIAL	[illegible]
3. PROCESSING	[illegible]
4. SURFACE PREPARATION	[illegible]
5. THICKNESS	[illegible]

SAFETY CONTROLLED

Unless otherwise specified dimensions are in millimeter. Tolerances are: Decimals Angles X. +/— +/— .X +/- 0.20 .XX+/- 0.10	THIRD ANGLE PROJECTION	LEVEL 3	DRAFTER HU	DATE 02/17/04	ELDER AUDIO MANUFACTORY The Third Industrial District Wenlong Hongguan Guangdong 523121 China
			CHECKER		DESCRIPTION PT280858 CABINET LT MB24-WR
	MATERIAL: 18MM import	2	ENGINEER HU	02/17/04	SIZE C FSCM CLASS DWG NO.: B7-XTKOLW-5MC75 REV
	FINISH: Plywood baked black lacquer	1	APP BY		SCALE NONE SHEET of

FNAME

REVDATE

USER